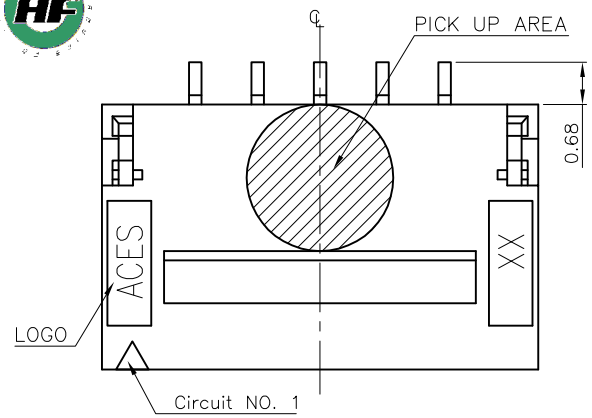

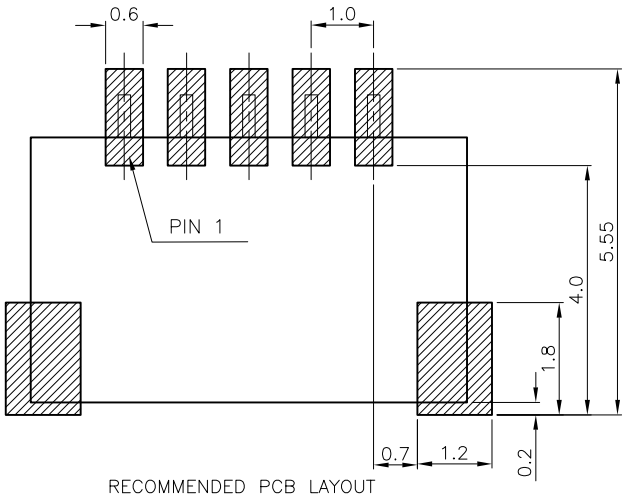

RECOMMENDED PCB LAYOUT
GENERAL TOLERANCE ±0.05

NOTES:
1. MATERIAL:
   1.1 HOUSING: LCP, HIGH TEMP.,UL94V-0.
   1.2 CONTACT: Phosphor Bronze
   1.3 FITTING NAIL: Brass
2. FINISH:
   2.1 CONTACT:
   50~100u" NICKEL UNDERPLATING OVERALL.
   1: GOLD FLASH PLATING ON CONTACT AREA.
   GOLD FLASH PLATING ON SOLDER AREA.
   D: 30u" MIN GOLD PLATING ON CONTACT AREA.
   GOLD FLASH PLATING ON SOLDER AREA
   N: 100~200u" MATT TIN PLATING OVERALL
   T: 10u" MIN GOLD PLATING ON CONTACT AREA.
   2.2 FITTING NAIL:
   50~100u" NICKEL UNDERPLATING OVERALL.
   1:GOLD FLASH PLATING ON SOLDER AREA.
   D:GOLD FLASH PLATING ON SOLDER AREA.
   N:100~200u" MATT TIN PLATING OVERALL.
   T:GOLD FLASH PLATING ON SOLDER AREA.
3. REFLOW SOLDER CAPABLE TO 260°C PER ACES SPEC.
4. SPEC. PLS. REFER TO PS-50224-xxxxx-xxx
5. PART NUMBER

P/N LEGEND

51262-XXX X X - XXX

NO OF CKT

PACKING
0:TAPE & REEL

PLATING
1:G/F
D: 30u"GOLD PLATING ON CONTACT
N: MATT TIN (LEAD FREE)
T: 10u"GOLD PLATING ON CONTACT

XXX	HOUSING COLOR	PACKAGE
001	BLACK	51262-XXXXX-XX-TRP

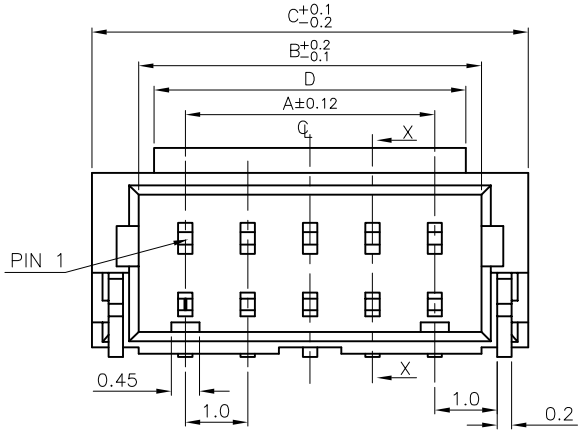

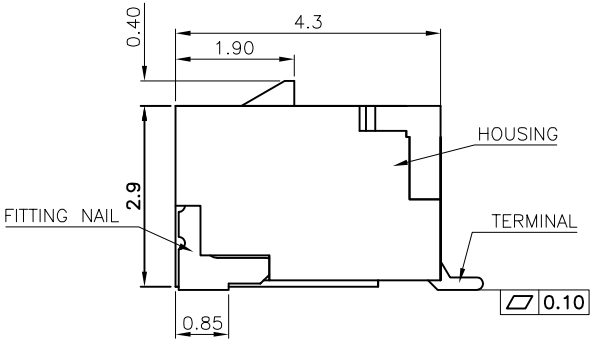

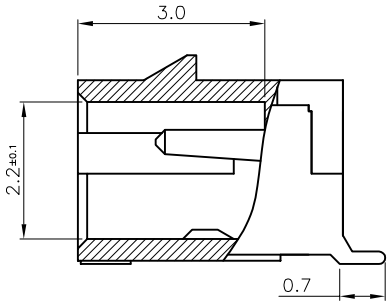

SECTION X-X

CKT	DIM A	DIM B	DIMC	DIMD
2	1.0	2.4	4.0	2.0
3	2.0	3.4	5.0	3.0
4	3.0	4.4	6.0	4.0
5	4.0	5.4	7.0	5.0
6	5.0	6.4	8.0	6.0
8	7.0	8.4	10.0	8.0
10	9.0	10.4	12.0	10.0
13	12.0	13.4	15.0	13.0
14	13.0	14.4	16.0	14.0
16	15.0	16.4	18.0	16.0
18	17.0	18.4	20.0	18.0

QUALITY SYMBOLS
MAJOR
CRITICAL

GENERAL TOLERANCES (UNLESS SPECIFIED)
X. ±0.5
.X ±0.25
.XX ±0.15
.XXX ±0.1
ANGLES ±2°

DRAWN BY: GUOFEI	DATE: 22'/09/27	ACES ELECTRONICS
CHECKED BY: Xu,ZhiYong	DATE: 22'/09/27	TITLE: 1.0mm WTB CONN.SMT R/A S/R TYPE
APPROVED BY: Xu,ZhiYong	DATE: 22'/09/27	
UNITS: mm		SIZE: A4
SCALE: 8 : 1	SHEET NO.: 1 OF 1	REV: P

RFQ NO.	N/A
PART NO.	SEE NOTES
DWG NO.	51262-XXXXX-XXX